600x600x650mm deep 10Mpamass concrete pads may be required at intersection of beams only in fill . Geotech/Engineer will assess on site.

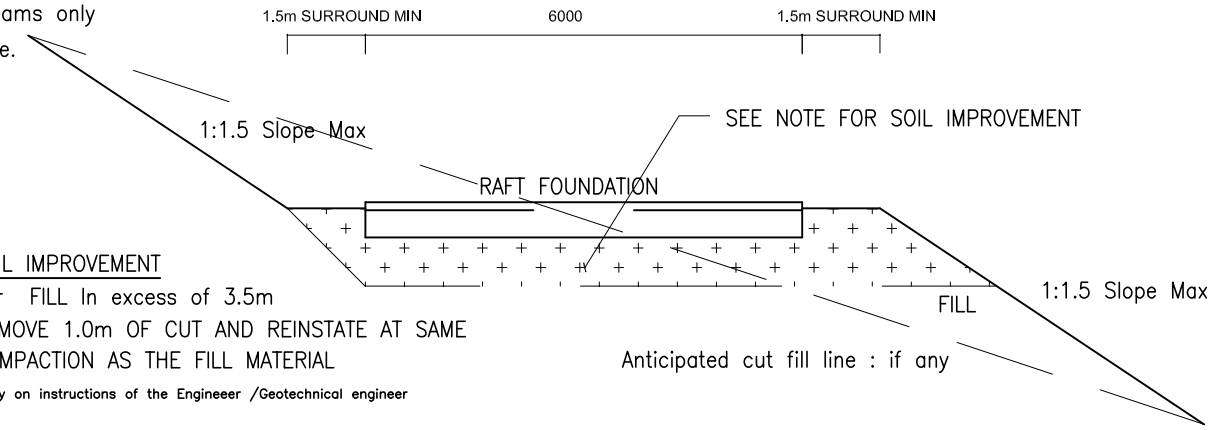

SOIL IMPROVEMENT

For FILL In excess of 3.5m
REMOVE 1.0m OF CUT AND REINSTATE AT SAME COMPACTION AS THE FILL MATERIAL

Only on instructions of the Engineeer /Geotechnical engineer

TYPICAL SECTION THRU PLATFORM

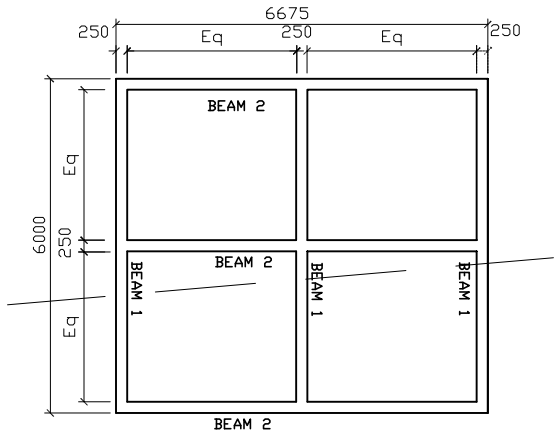

PLAN ON RAFT FOUNDATION-TYPE 2

SCALE : NTS

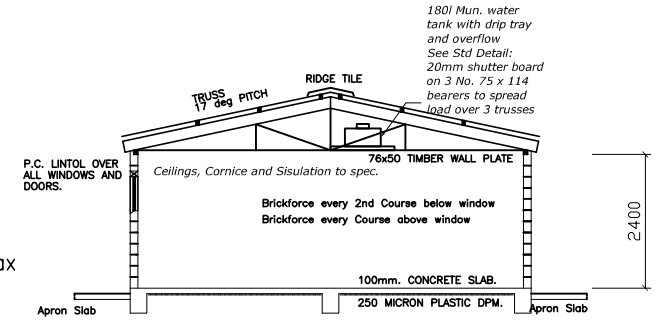

SECTION A - A
scale 1 : 100

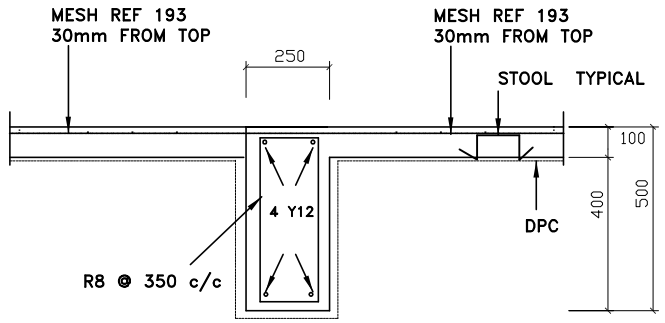

TYPICAL SECTION
THROUGH INTERNAL BEAM
1:50

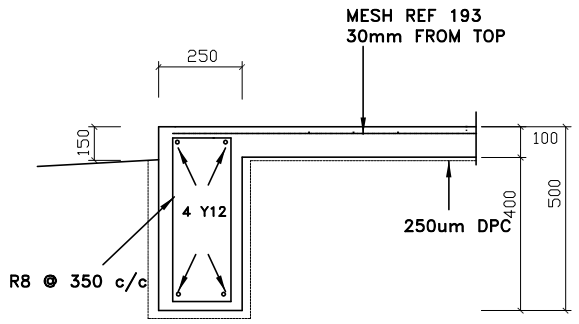

TYPICAL SECTION
THROUGH EXTERNAL BEAM
1:50

Designed for Concrete strength of 25 MPa @ 28 days/19mm Aggregate

ONE UNIT ONLY SCHEDULED

MEMBER	No. Off	REINFORCEMENT					BENDING DIMENSIONS					
		Type & Dia	Mark	No in Each	Total No.	Length mm	Shape Code	A mm	B mm	C mm	D mm	E/R mm
BEAM 1	3	Y12	01	04	12	6200	35	5900				
		R08	03	16	48	1250	60	420	150			
BEAM 2	3	Y12	01	04	12	6870	35	6570				
		R08	03	19	57	1250	60	420	150			
		R08	08	8	8	1140	83	500	70	250	STOOLS	

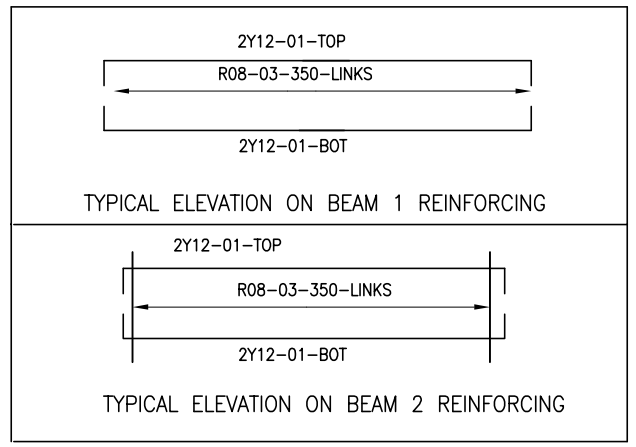

REINFORCING

NOTES.
1. Platform to be stripped of all vegetation and topsoil prior to of placing fill material.
2. Fill material to be compacted in 300 mm layers to 95% Mod AASHTO.
3. All cut and fill banks are not to exceed a maximum slope of 1:1.75 or 34 deg
4. No service trenches to be left open for more than 2 days.
5. All service trenches to be compacted 93% MOD AASHTO.
6. The building platform must be well graded as indicated to prevent any water from ponding around the raft.
7. Provide P.C. lintols over all doors and windows or use ring beams if concrete blocks are used.
8. Concrete works strength at 28 days to be 25 Mpa.
9 . Cover to reinforcement: Beams 50mm ; Slab 40mm from the platform level.
10. All concrete must be well vibrated during placing using mechanical vibration.
11. All reinforcement must be inspected by the engineer prior to pouring of concrete.
12. If concrete blocks are used brickforce to be placed every 2nd course external walls and every second course internal walls.
13. Maxi block and concrete blocks external/ internal wall butt joint to SABS recommendations.
14. Provide benches to fills of platforms when n.g.l. slope exceeds 1:6.
15 .Reinforcement in external beams to be moved to maintain minimum cover requirements and accommodate the required recess at the threshold of each external door and the 50mm weather step at stoep where applicable.
16. 600 x 600 10MPa mass concrete pads to be placed at the intersection of the raft beams as instructed by the Engineer.
17. ANY DISCREPANCIES TO BE REPORTED BEFORE ANY WORK IS PUT IN HAND .
18. NO CONCRETE TO BE POURED WITHOUT THE ENGINEERS CONSENT .
19. NO STRUCTRUAL ALTERATIONS ARE TO BE MADE WITHOUT AMENDED DRAWINGS .
20. SLEEVES AND DUCTS TO BE PROVIDED FOR ALL PIPES AND SERVICES .

FOUNDATION DESIGNED FOR CATEGORY 1 EXPECTED DAMAGED AS SET OUT IN N.H.B.R.C. STANDARDS AND GUIDELINES.

V. GOVENDER

NTUZUMA H-BLOCK 2
6.0m x 6.675m unit

FOR H/H1 TYPE SOILS

DO NOT USE THESE FOUNDATIONS FOR H3 SOILS

DRG No. 12/01/22 -S19-02-REV 0

V. GOVENDER

CELL 0833240073